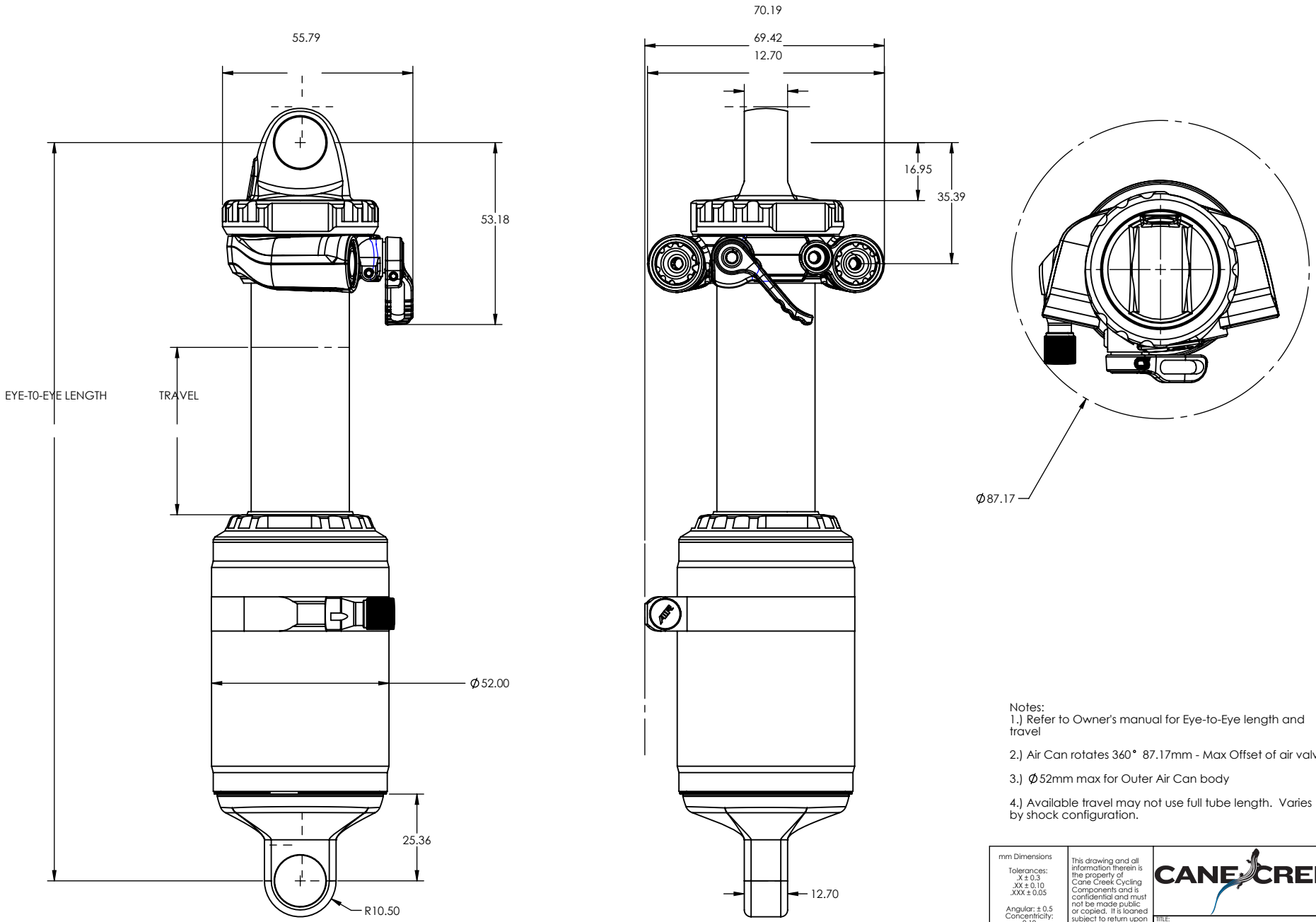

Notes:
1.) Refer to Owner's manual for Eye-to-Eye length and travel

2.) Air Can rotates 360° 87.17mm - Max Offset of air valve

3.) Ø52mm max for Outer Air Can body

4.) Available travel may not use full tube length. Varies by shock configuration.

mm Dimensions Tolerances: .X ± 0.3 .XX ± 0.10 .XXX ± 0.05 Angular: ± 0.5 Concentricity: 0.10 Third Angle Projection	This drawing and all information therein is the property of Cane Creek Cycling Components and is confidential and must not be made public or copied. It is loaned subject to return upon demand and is not to be used in any way that is detrimental to our interests.	CANE CREEK TITLE: *DBInline Dimensions*
Material:		SIZE B · Part No. · REV. 01
Weight:		
Finish: various	Color: Black/Gold	SCALE: 1:2 · SHEET 1 OF 1